IPELA™
INTEGRATED VISUAL COMMUNICATION

SG-CXTL80 Camera Manual
July 2010
Product Manual SG-CXTL80 camera

Product Information

SG-CXTL80 HD camera unit
For High Definition
PCS-XG80 and PCS-XG55
Videoconferencing System

www.spireglobal.com

IPELA™
INTEGRATED VISUAL COMMUNICATION

Introduction

The SG-CXTL80 camera unit has been designed specifically for usage with the PCS-XG80 and PCS-XG55 HD videoconference terminal, providing the smallest design and highest specification camera unit available today to meet customer expectations for quality in videoconference applications. This camera unit delivers unparalleled small form factor HD quality by providing and capturing as standard 1080i video while seamlessly connecting to the PCS-XG80 and PCS-XG55 which provides numerous configuration and installation usage options

The small form factor of the camera allows users to deploy 1080i HD videoconferencing within many variable deployments, providing users with HD desktop deployments, HD SOHO meeting spaces or HD small room environments.

For traditional meeting spaces or medium to large room deployments we recommend using the standard complete PCS-XG80 or PCS-XG55 package that ships with the PCS-CXG80 camera

Target Applications

The SG-CXTL80 camera unit complements PCS-XG80 and PCS-XG55 to be able to provide 1080 HD communications and video within many meeting spaces:

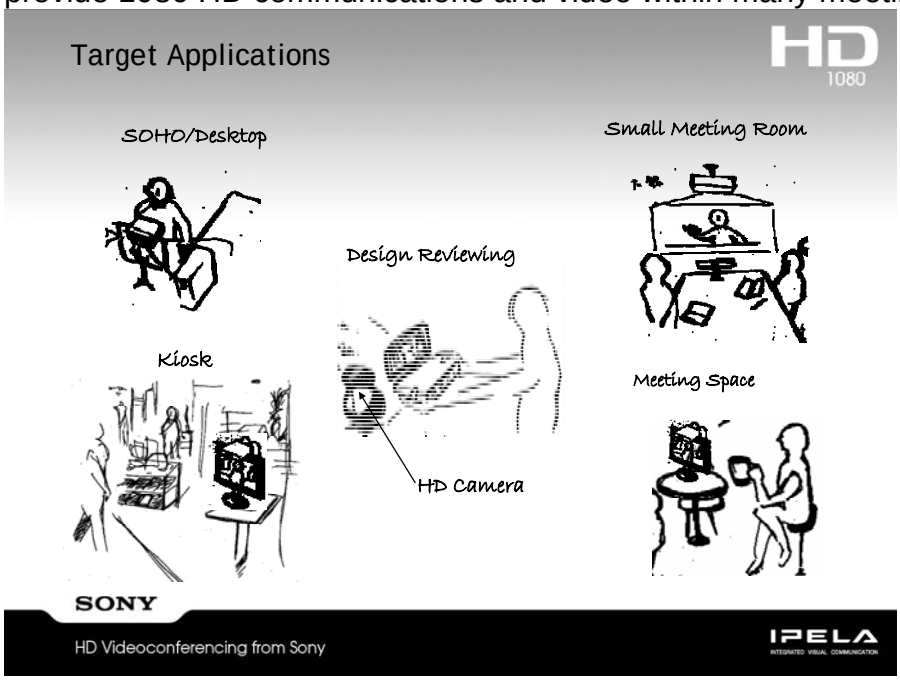

As well as providing many applications to compliment the standard PCS-XG80 and PCS-XG55, the SG-CXTL80 camera's streamlined design allows customers to use any size or style of display. The camera simply is mounted to the top of any display and does not limit the user for functionality.

IPELA™
INTEGRATED VISUAL COMMUNICATION

Installation for Desktop Application

The SG-CXTL80 camera connects to a LCD display monitor top and can be fixed using the supplied mounting bracket and Velcro if needed. The camera uses an internal single omni-directional microphone, delivering monaural audio, not stereo. The cable from the camera is connected to the PCS-XG80S codec main camera port, and the microphone tail from this cable is connected to either microphone A1/A3 port 1(L) or 1(R) port. Please ensure to setup audio source as mono signal within PCS-XG80S setup configuration

If using Computer Display

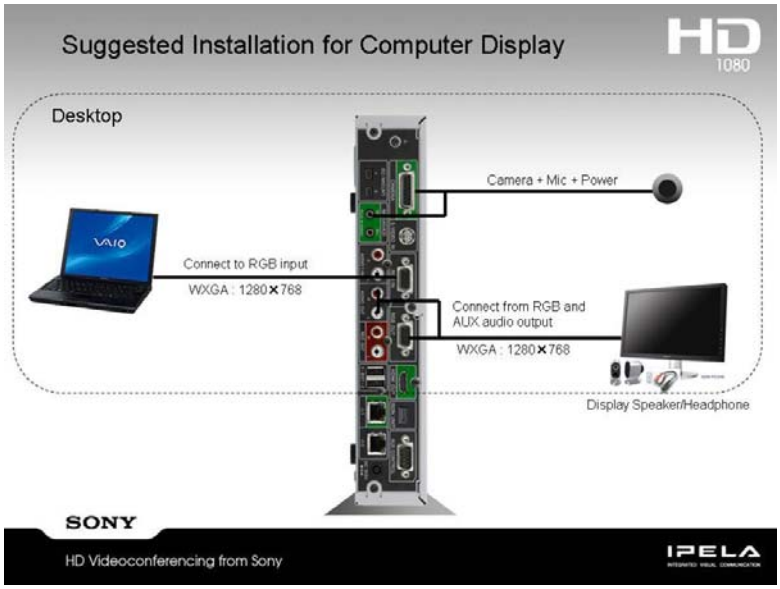

If using Consumer Display

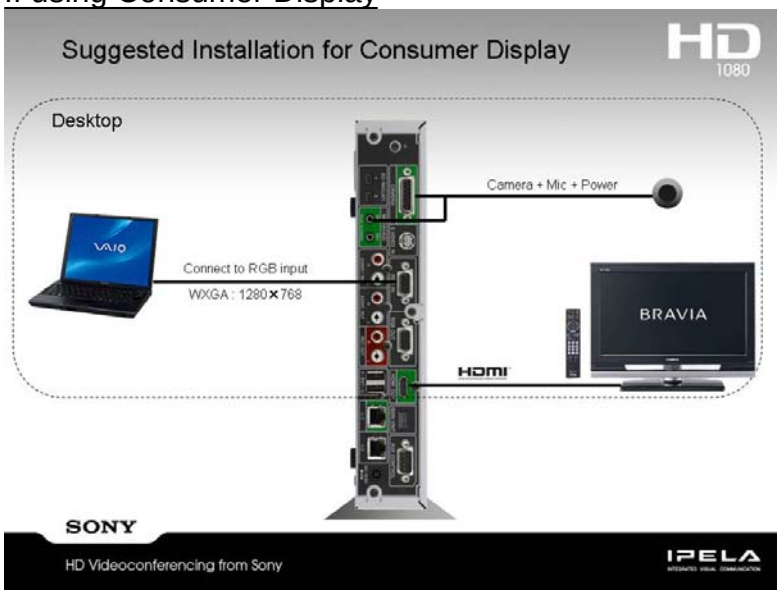

www.spireglobal.com

IPELA™

INTEGRATED VISUAL COMMUNICATION

PCS-XG80 and PCS-XG55 setup specifications for SG-CXTL80

Once you connect the SG-CXTL80 camera to the PCS-XG80/PCS-XG55 videoconference terminal please check that the camera is switched on and not muted from the button on the side of the camera. Within the PCS-XG80 machine status field you should see that the camera is referenced as an EVI-HD1 followed by version number. This is to ensure that the PCS-XG80/55 can control the optical zoom of the camera

The camera unit is designed for US markets, as such the camera frequency has been internally pre-set at manufacturing stage to 60Hz, please ensure that the PCS-XG80/55 video mode is also configured within video1 setup menu to correct display type of HDMI or RGB format for display used and also ensure that setting for 60Hz frequency is set

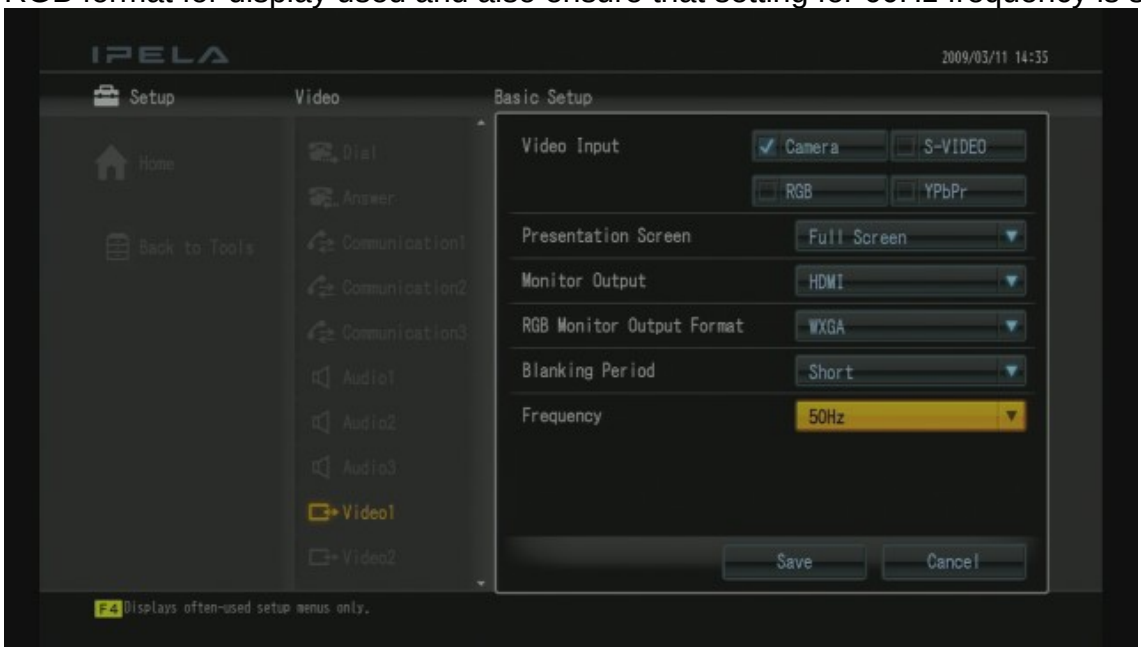

www.spireglobal.com

IPELA™
INTEGRATED VISUAL COMMUNICATION

The camera unit only has a single inbuilt microphone please ensure that you configure the PCS-XG80/55 audio 1 setup menu to input mode to Monaural as shown:

The button on the left hand side of the camera body acts as the video and internal microphone e-mute button, this button is a toggle button “ON / OFF”. When the camera is live and transmitting video and audio from the internal microphone to the PCS-XG80/55 terminal the red LED Tally light on the camera top lights up to indicate operation

IPELA™
INTEGRATED VISUAL COMMUNICATION

Camera control from PCS-XG80/55

Zoom:

The SG-CXTL80 camera has optical zoom available that can be controlled through the PCS-XG80/55 remote control, when accessing the camera menu and highlight and then select “adjustments” you can select the ZOOM + ZOOM – position directly from the remote which will activate the zoom of the camera.

Note: When terminal is not in communications you cannot move directly inside the “adjustments” menu because the camera has no motorized pan or tilt

While “Adjustments” is highlighted please press the “Enter” button from the RF remote commander, you can then control the ZOOM+ or ZOOM- by pressing the ZOOM buttons from the RF remote commander. Once the camera is in ZOOM mode either + or – the adjustments menu will then be visible.

IPELA™
INTEGRATED VISUAL COMMUNICATION

Additional camera control functions available through PCS-XG80/55 on screen menu structure are:

- Brightness control
- Backlighting
- White Balance
- Focus

Camera control functions not available for control are:

- Preset control or preset image capture
  These cannot be selected or stored
- Brightface™ / Noise reduction function
  These are not available for this camera as this operation is only available for the PCSA-CXG80 camera
- Image Flip
  This is not available for this camera as this function is only for BRC camera range that support image flip function

Camera specifications:

Image Sensor	1/3 Type CMOS
Number of Pixels	2M pixels
Lens	10 x Zoom F=5.1 wide
Digital Zoom	12 x (120x optical zoom)
Distance	10mm (wide) to 800mm (tele)
Lens Distortion	Less 3% (wide)
S/N Ratio	50dB
Min illumination	12Lx (F1.8 50IRE)
White Balance	Auto / Manual / One Push / Indoor / Outdoor
Gain Control	Auto or Manual
Focus	Auto / One Push / Manual
Configured Signal Setting	1080i/60
Aspect Ratio	16:9

Internal Microphone specifications

Microphone Type	OMNI Directional ECM
Sensitivity	7.9mV/Pa/1kHz
Frequency Response	50Hz - 16000Hz
Impedance	2.2kohm
Ratio, Signal to Noise Audio	58dB

IPELA™
INTEGRATED VISUAL COMMUNICATION

Camera Side Appearance

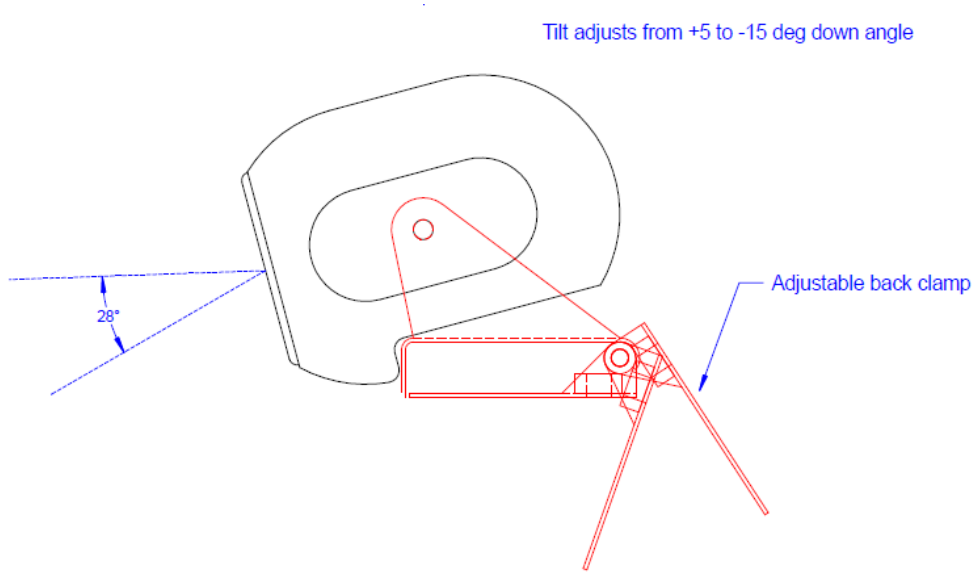

Shown with 15deg down angle which brings the top of frame just below the horizon at the widest angle of lens.

Camera Front

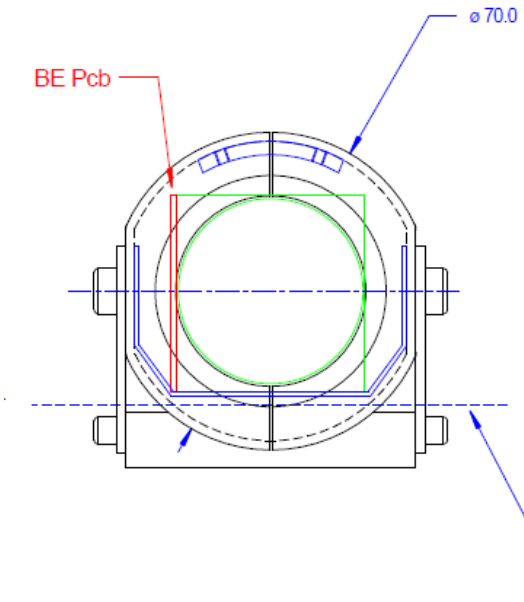

IPELA™
INTEGRATED VISUAL COMMUNICATION

CXTL80 Connection cable

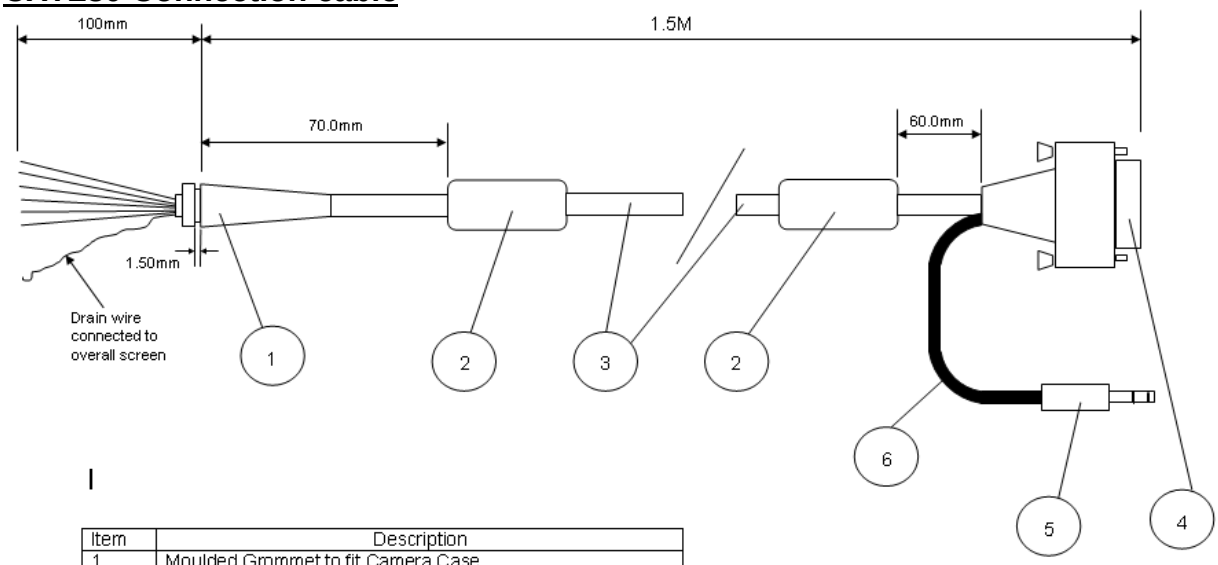

Item	Description
1	Moulded Grommet to fit Camera Case
2	Ferrite Core – moulded onto cable
3	Special cable P/N xxxxxx – xxxxxxxx
4	15 way 'D' Plug – moulded onto cable c/w thumb screws
5	3.5mm Jack Plug – Stereo type
6	Jacketed twisted pair with screen 150mm long

CXTL80 Pin assignments

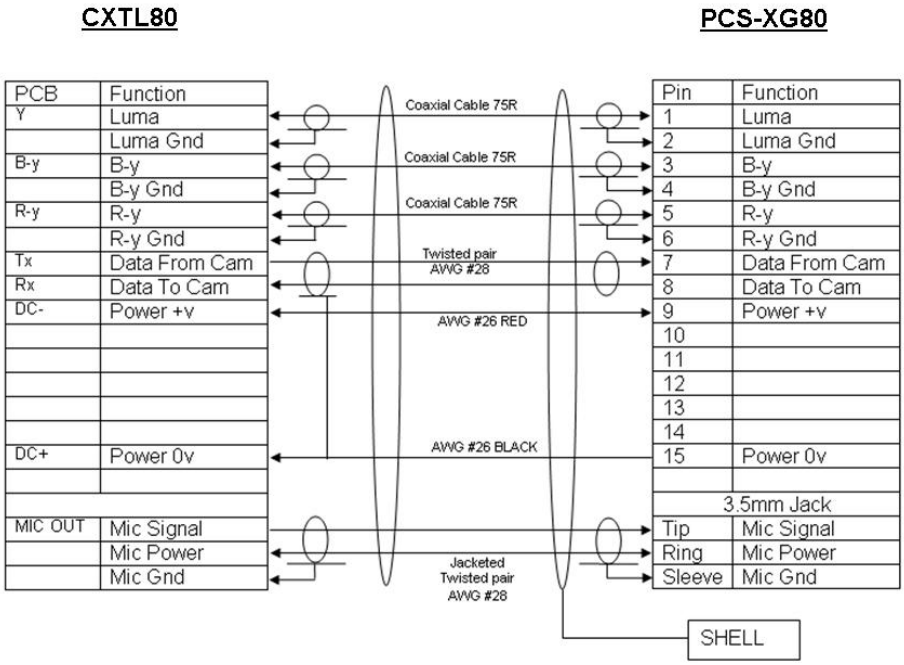

www.spireglobal.com